BÂTI-SUPPORT 535 SOL

SIAMP

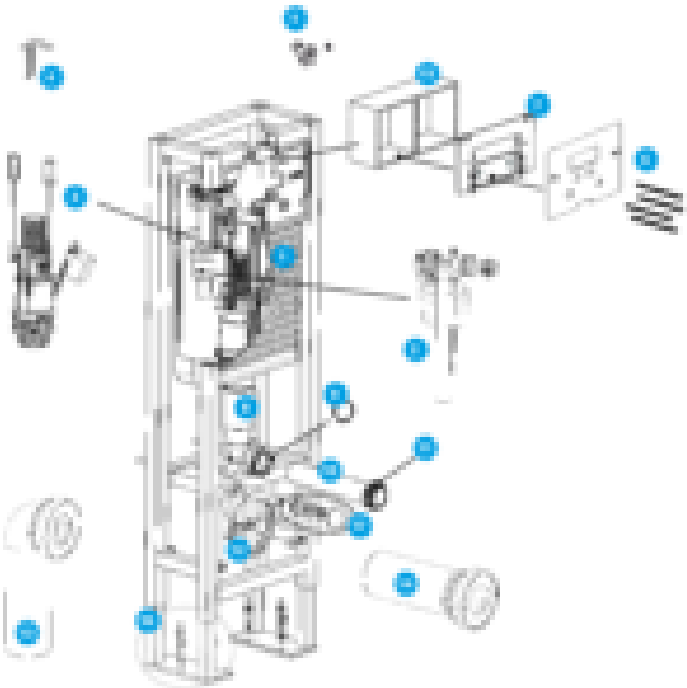

N°	Désignation	Référence
1	[illegible]	[illegible]
2	[illegible]	[illegible]
3	[illegible]	[illegible]
4	[illegible]	[illegible]
5	[illegible]	[illegible]
6	[illegible]	[illegible]
7	[illegible]	[illegible]
8	[illegible]	[illegible]
9	[illegible]	[illegible]
10	[illegible]	[illegible]
11	[illegible]	[illegible]
12	[illegible]	[illegible]
13	[illegible]	[illegible]
14	[illegible]	[illegible]
15	[illegible]	[illegible]
16	[illegible]	[illegible]
17	[illegible]	[illegible]